HEROS

Air Handling Units

technogen®

smart solutions for HVAC

Contents

HEROS

3 Overview

5 Design and Structural Features

17 Dimensions

18 Quick Selection

19 Control & Automation Systems

technogen®
smart solutions for HVAC

technogen®

HEROS

Air Handling Units

Overview

Technogen HEROS Air Handling Units are designed by **Technogen** R&D team for hygienic, comfort and industrial needs. The core point of design process is energy efficiency. The panel and body design of units can meet low levels of thermal bridging . The easy mounting and demounting of the units can be done easily thanks to modular design of the units.

HEROS units are available in 62 standard dimensions, designed in accordance with industry-standard filter sizes to provide users with a wide range of alternative solutions. The modular design of HEROS units allows for the integration of up to 19 different cell types, including: Fan Cell, Panel Filter Cell, Bag Filter Cell, Activated Carbon Filter Cell, Heating/Cooling or DX Coil Cell, Plate-Type Heat Recovery Cell, Rotary-Type Heat Recovery Cell, Heat Pipe Heat Recovery Cell, Run-Around Heat Recovery Cell, Electrical Heater Cell, Steam Humidifier Cell, Pad Humidifier Cell, Silencer, Double Damper Mixing Cell, Triple Damper Mixing Cell, and Empty Cell.

Each cell type can be configured in any of the 62 available dimensions to meet specific technical requirements.

Certified Excellence

EN 1886 Compliance: Every **Technogen** unit meets high mechanical strength, thermal insulation, airtightness, and hygiene classifications.

ISO 9001 Quality Management System: Guarantees sustainable quality, operational consistency, and continuous improvement across all production stages.

CE Marking: Demonstrates compliance with EU health, safety, and environmental directives.

EUROVENT Certification: Verifies the thermal and mechanical performance of our products with independent third-party validation.

GOST Certification: Validates product conformity for the Eurasian market, including Russia, Belarus, and Central Asia.

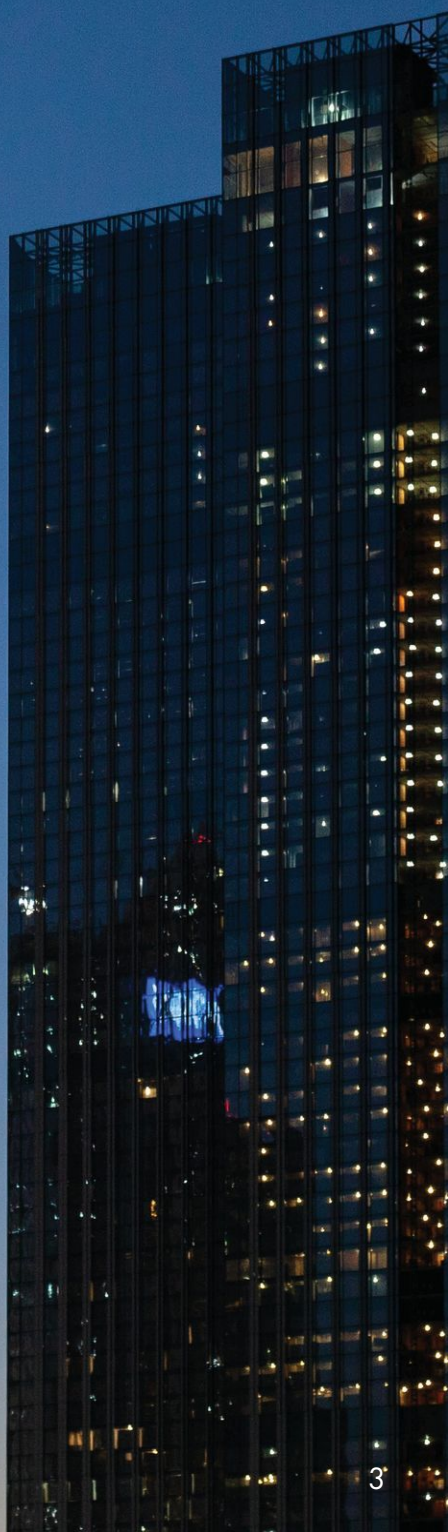

technogen®

HEROS

Overview

Selection Software

The Technogen AHU Selection Software is a comprehensive, web-based platform developed to meet the needs of engineers, designers, and consultants by offering a seamless and accurate air handling unit configuration experience. Fully compliant with Eurovent standards, the software enables precise product selection with access to all relevant manufacturing details.

Key Features of the Technogen AHU Selection Software:

Optimized Unit Selection: Enables the precise selection and configuration of air handling units based on the required airflow and system specifications.

Detailed Technical Drawings: Generates actual unit drawings in DXF format to support design integration and technical documentation.

Customizable Documentation: Offers technical documents for each configured unit in various formats and languages to support local and international projects.

Component-Level Selection: Utilizes the most up-to-date manufacturer DLLs for accurate selection of fans, coils, and multiple heat recovery systems, including:

- Rotor Type Heat Recovery
- Plate Type Heat Recovery
- Run-Around Coil Systems

Real-Time Quotation Generation: Instantly produces up-to-date cost quotations based on selected configurations.

Flexible Configuration Modules: Supports selection and customization of all key AHU components:

- Fan Sections
- Coil Sections (Water, Direct Expansion - DX)
- Heat Recovery Units (Rotor, Plate, Run-Around)
- Electric Heaters
- Filtration Options (Panel, Bag, Carbon, HEPA, etc.)
- Humidification Systems (Pad, High Pressure, Steam)
- Silencer Sections
- Mixing Sections

With T**echnogen's** advanced AHU selection software, users can efficiently design, configure, and quote tailor-made air handling units with a high level of accuracy and confidence.

technogen®

HEROS

Design & Structural Features

Housing

HEROS Modular Air Handling Units are engineered with precision using a robust anodized aluminum frame, achieving D2, L1, T3, and TB3 classifications in full compliance with EN 1886 standards. Their modular design accommodates standard filter sizes, offering flexible, tailor-made solutions to meet diverse project requirements.

A high-performance gasketing system ensures complete separation between the inner and outer metal surfaces, preventing thermal bridging and enhancing energy efficiency.

Instead of traditional intermediate connections, panels are joined directly to one another. This seamless construction delivers uniform insulation across the entire casing, ensuring exceptional thermal performance and minimizing energy loss.

Built for durability, efficiency, and adaptability, **HEROS** Modular Units combine advanced engineering with superior craftsmanship to set a new standard in air handling technology.

Feet

The specially engineered support feet of **HEROS** Air Handling Units are designed to deliver superior convenience during both transportation and operation. Each module is equipped with its own dedicated foot, ensuring easy access to the underside of every section for inspection and maintenance.

Strategically positioned horizontal and vertical connection points enhance handling efficiency, allowing the units to be transported, positioned, and installed with maximum ease. This thoughtful design detail reflects **Technogen's** commitment to combining functionality with user-friendly engineering.

technogen®

HEROS

Design & Structural Features

Panel Structure

HEROS Air Handling Units feature high-performance panels with a thickness of **50 mm**, insulated with **70 kg/m³** rockwool for exceptional thermal and acoustic performance. The panel design ensures a smooth, flush surface both inside and outside the unit, enhancing hygiene and aesthetics.

Specially engineered gaskets eliminate thermal bridging and contribute to remarkably low thermal loss values. The inner panel sheets are manufactured from **0.9 mm** (**275 g/m²**) galvanized steel, while the outer sheets are 1 mm thick and finished in **RAL 9002** for a durable, premium appearance.

Panels are securely fastened to the structural frame using corrosion-resistant screws, which are fully sealed inside the unit and protected externally with plastic stoppers—ensuring long-term durability and resistance to environmental wear.

Panel Body Specifications

Mechanical Strength	PVC Heat Bridge Reduced Sandwich Panel
Air Leakage on the Body	0.9 – 0.9 mm (Galvanized or Stainless)
Outside Sheet Thickness	0.9 – 0.9 mm (Painted or Stainless)
Insulation Type	50 mm thick, 70 kg/m³ Density Rock Wool

Case Characteristics According to EN 1886

In the Eurovent certification process, air conditioning plants are tested in accordance with the conditions specified in EN 1886. These tests are conducted under the categories of mechanical strength, casing air leakage, filter bypass leakage, thermal transmittance, thermal bridging, and sound insulation. The evaluations are carried out on a model box, which is built to reflect all the structural specifications of the air handling unit casing as defined by the standard. The results of these tests determine the technical performance characteristics of the air handling unit casing.

technogen®

HEROS

Design & Structural Features

Mechanical Endurance

The deflection amount of the AHU body structure is measured under ± 1000 Pa pressure and ± 2500 Pa pressure is measured to determine whether permanent deformation occurs in the AHU body structure.

Body Strength Class	Maximum Displacement (mm/m)
D1	4
D2	10
D3	10<

Body Air Leak

Air leaks from the air handling unit are determined by testing under -400 Pa and +700 Pa.

Body Air Leakage Class	Maximum Leak Rate f_{-400} ($lxs^{-1}xm^{-2}$)	Maximum Leak Rate f_{700} ($lxs^{-1}xm^{-2}$)
L1	0,15	0,15
L2	0,44	0,44
L3	1,32	1,32

Panel Filter By-Pass Leak Class

It is the test where the amount of air passing through the filter frame without filtration is determined and classified.

Filter Class	G1-M5	M6	F7	F8	F9
Maximum Filter Leakage Rate %k	6	4	2	1	0.5

technogen®

HEROS

Design & Structural Features

Thermal Conductivity Class

It is the test where the thermal leaks from the air handling plant's body are determined and measured.

Thermal Conductivity Class	T1	T2	T3	T4	T5
U-value ($W \cdot m^{-2} \cdot K^{-1}$)	0,5	1	1.4	2	>2

Heat Bridge Class

It is the test where the heat bridges that can form in the body of the air handling unit are identified and measured.

Heat Bridge Class	TB1	TB2	TB3	TB4	TB5
k_b	1	0.75	0.6	0.45	0.3

EN 1886 Performance Test Report – HEROS

Body Strength Class	D2
Body Air Leakage Class (F400 / F700)	L1 / L1
Filter By-Pass Leakage Class	F9
Thermal Conductivity Class	T2
Heat Bridging Class	TB2

technogen®

HEROS

Design & Structural Features

Fan & Motor

Depending on design requirements, HEROS Modular Air Handling Units can be equipped with forward-curved, backward-curved, or aerofoil plug fans. Advanced selection software allows precise fan configuration, enabling optimal performance and efficiency for each application.

The fan inlet can be oriented either horizontally or vertically, providing flexibility in system design. Units can also be manufactured with square or rectangular flanges to suit specific installation needs.

Conventional Fans

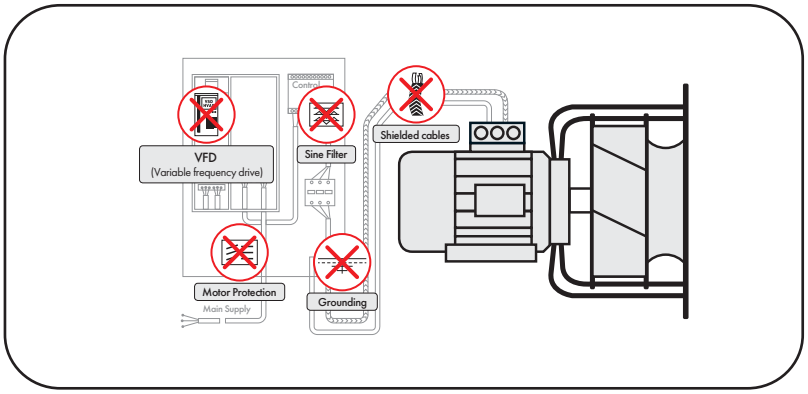

GreenTech EC Fans

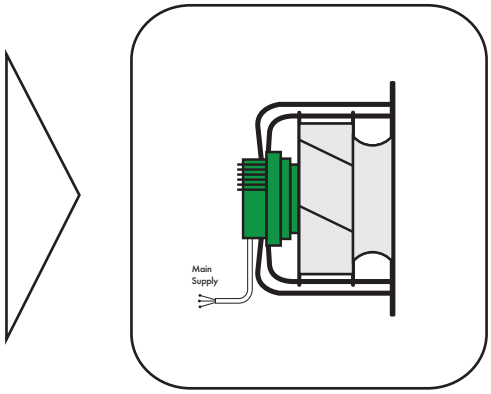

The fan and motor sections of HEROS Air Handling Units are mounted on spring isolators to minimize vibration and ensure smooth, quiet operation. Each section is equipped with a service cover, allowing easy access for motor replacement, fan cleaning, and belt adjustment or replacement.

Optional features include an observation window, internal cell lighting, belt fault detection systems, and constant flow kits (available for plug fans). For specific applications, the motor can also be installed externally to suit particular design or maintenance requirements.

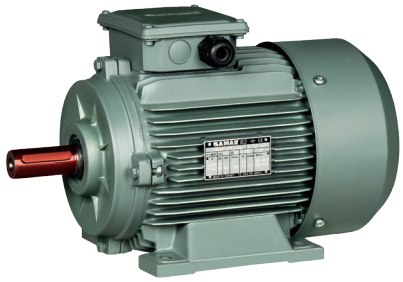

technogen®

HEROS

Design & Structural Features

Damper

HEROS Modular Air Handling Units are equipped with aerofoil-profiled, opposed-blade dampers designed for precise airflow control. The damper body and blades are constructed from painted aluminum for durability and corrosion resistance, while integrated gaskets ensure minimal air leakage.

Manual dampers are supplied as standard, with the option to equip units with motorized dampers for automated control. Damper actuators are available in both on/off and proportional control configurations to suit varying system requirements.

HEROS Air Handling Units offer three damper section configurations: a suction cell with a single damper, a mixing cell with double dampers, and a mixing cell with triple dampers. The appropriate configuration is selected based on specific technical requirements.

In mixing cell applications, dampers are sized and calculated according to air velocity when handling the full design air volume. For added functionality, filters can be optionally integrated into the damper sections.

Filter Section

Four types of filters are used in HEROS Modular Air Handling Units. Due to filter classifications , the dust keeping

	DIN EN 779 [1]		EUROVENT 4/9 [2]	
	Particle Keeping Average [%]		*Particle Keeping Average [%]*	
Panel Filter	G 1	Om < 65	EU 1	Om < 65
	G 2	65 ≤ Om < 80	EU 2	65 ≤ Om < 80
	G 3	80 ≤ Om < 90	EU 3	80 ≤ Om < 90
	G 4	90 ≤ Om	EU 4	90 ≤ Om
	Particle Keeping Average [%]		Particle Keeping Average [%]	
Bag/Compact Filter	F 5	40 ≤ Em < 60	EU 5	40 ≤ Em < 60
	F 6	60 ≤ Em < 80	EU 6	60 ≤ Em < 80
	F 7	80 ≤ Em < 90	EU 7	80 ≤ Em < 90
	F 8	90 ≤ Em < 95	EU 8	90 ≤ Em < 95
	F 9	95 ≤ Em	EU 9	95 ≤ Em

technogen®

HEROS

Design & Structural Features

Panel Filter

Panel filters are used for pre-filtering in comfort applications. To increase the air passage surface, panel filters are produced in a zigzag shape. Due to their dust-holding capacity, panel filters can be classified as G2, G3, and G4 class. They can be cleaned with air, and washable types are also available as an option.

They can be specially produced to retain grease and similar elements. The dimensions are standard, and maintenance as well as replacement of the filters is easy.

Bag Filter

These filters are classified as M5, M6, M7, M8, and M9 according to their dust-holding performance under EN 779 regulations. They are used for re-filtering pre-filtered air and have a high dust-holding capacity. To reduce pressure loss, they can be produced with 300 mm pockets.

Optional pocket lengths of 600 mm are also available.

Compact Filter

These filters are classified as M5, M6, M7, M8, and M9 according to their dust-holding performance under EN 779 regulations. They are used for re-filtering pre-filtered air and have a high dust-holding capacity. If a compact design is required, compact filters can be used as an alternative to bag filters, as their length is 292 mm.

These filters are not cleanable and must be replaced when they become dirty.

Active Carbon Filter

They are used for the removal of unwanted odors and vapor molecules from the air. They offer a wide range of applications, particularly in process environments such as industrial kitchens, aircraft hangars, chemical production facilities, and wastewater treatment plants. These cylindrical filters contain activated carbon granules that capture harmful and undesirable gases. Over time, the granules lose their particle retention capacity and must be replaced with new ones to maintain effective filtration.

HEROS

Design & Structural Features

Heating / Cooling Coils

Different types of heating and cooling coils are used in **HEROS** Modular Air Handling Units, depending on the required capacities specified in the project. Cooling coils can operate with either water or refrigerant, while heating coils can also operate with steam. Coil selection is made using dedicated software, based on the required capacity, pressure loss, and geometrical design.

As standard, coils are made of copper tubes with aluminum fins, while copper tubes with copper fins are available as an option. Steel coils are also available upon request. Water coils are equipped with air purges as a standard feature. Bypass sheet metal surrounds the coils to prevent air leakage.

If the air velocity over the cooling coil exceeds 2.5 m/s, the cooling coil is manufactured with a drop eliminator.

Electrical Heater

Electrical heaters are used when no thermal source is available for heating or to minimize the risk of freezing. They are equipped with thermostats for safe operation and to shut down the unit in case of excessive temperatures. These heaters can be integrated into an automation system, ensuring that uncontrolled high temperatures are prevented.

Electrical heaters can also be supplied with automation panels, allowing them to operate in conjunction with various accessories.

technogen®

HEROS

Design & Structural Features

Steam Humidifiers

It consists of a microprocessor controlled steam producer and pipes. The steam coming from humidifier goes through air handling unit with pipes. They produce steam by using electricity.They have types which work controlled as on/off and also proportional, and capacity between 5kg/h -180kg/h and electrical current between 230-400V.

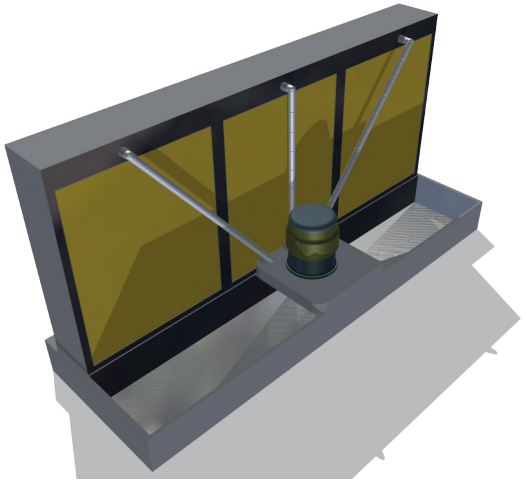

Humidifiers with Pad

These type humidifiers has a pad which transfers humidity. This pad is selulosic based and while air passing through this pad the humidity level increases thanks to humidity transfer feature of the pads. They are used with drop eliminators to prevent water drops go through to air, if the air speed is more than 2,5m/s.

Silencer

The noise levels in **HEROS** Modular Air Handling Units are very low, thanks to the body's noise reduction features. Silencers are used to minimize noise caused by air movement or in applications where very low noise levels are required. Three types of silencers are used as standard, classified according to their lengths. The table below shows the noise reduction levels of silencers at

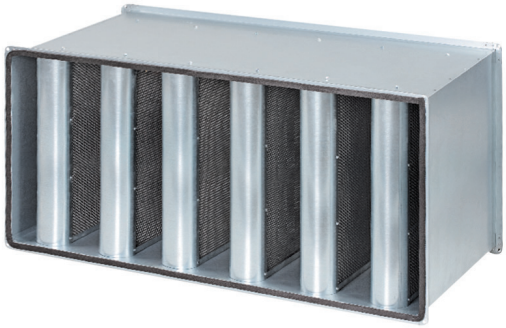

Cell Length	63Hz	125Hz	250Hz	500Hz	1000Hz	2000Hz	4000Hz	8000Hz
mm				dB				
600	4	8	15	15	17	12	9	6
900	6	12	22	22	24	23	13	9
1200	7	15	27	28	29	29	19	12

technogen®

HEROS

Design & Structural Features

Diffusers

Diffusers are used with units equipped with radial fans to adjust and stabilize airflow.

It is highly recommended to install silencers when the fan operates in the same direction as the airflow, to reduce noise and ensure a homogeneous airflow pattern.

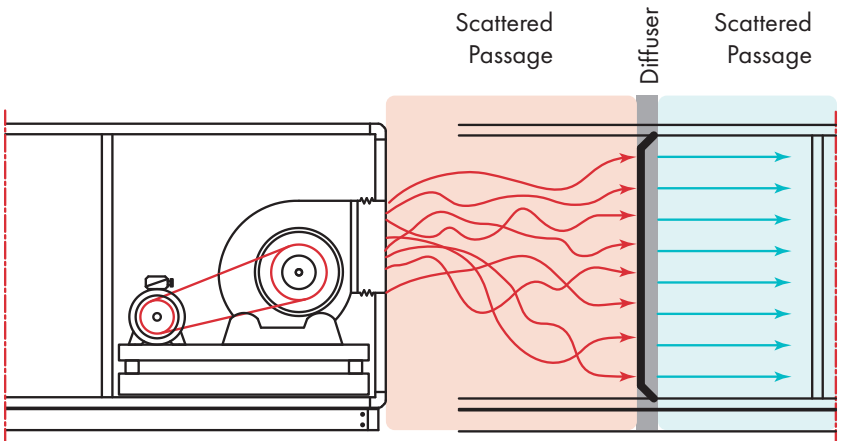

Heat Recovery

In accordance with increasing demand for energy effciency, heat recovery sections are designed to recover the energy on the exhaust air. There are two types heat recovery applications selected from the Jupiter selection software.

Heat Recovery with Cross-flow Aluminium Plate Exchangers

It is the most common method of heat recovery. Inlet and exhaust air can transfer up to 70% of the thermal load due to air temperature and relative humidity. High efficiency and low pressure losses can be achieved with these types of exchangers. The fresh air and exhaust air flow through separate paths, preventing the transfer of odors or other particles.

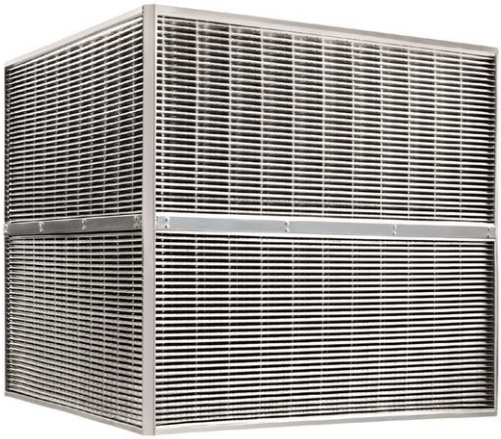

HEROS units using these exchangers can also have a free-cooling feature. In such applications, the airflow passes directly inside without going through the exchanger, using a bypass damper located on the exchanger. This is an optional feature, which can be supplied with a damper motor and automation.

A drain pan is used to collect condensate where the exhaust air leaves the exchanger in case of possible condensation. An additional drain pan can be installed in the other airflow path in environments where the relative humidity is very high.

Cross-flow heat recovery sections are designed as follows for standard applications:

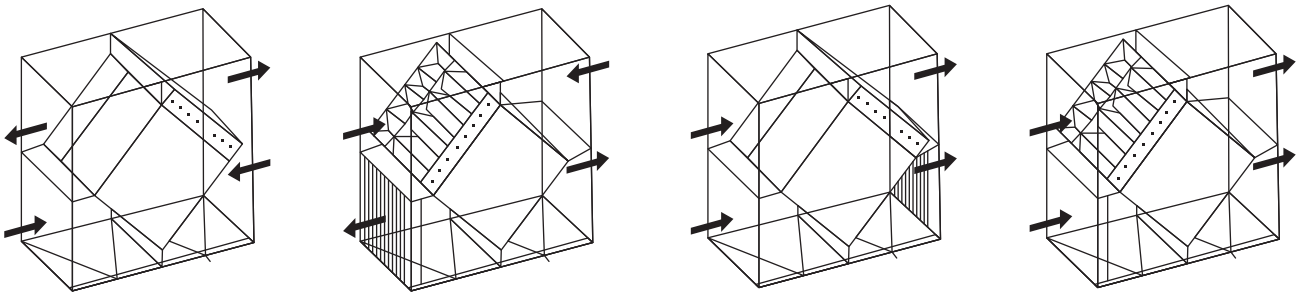

HEROS

Design & Structural Features

Rotary Type Heat Recovery

High efficiency levels, humidity transfer capability, and a compact structure are the features that make rotary-type heat recovery suitable for use in air handling units. The rotary consists of aluminum sheets wound around each other in a sinusoidal shape. The spacing between the aluminum sheets forms the area where heat transfer takes place. This spacing also determines the efficiency level and pressure loss of the rotary.

Aluminum sheets can be coated with special materials depending on the required level of humidity transfer. Efficiencies can reach up to 80% due to the materials applied to the aluminum sheets, although humidity transfer levels will vary.

Humidity transfer efficiency with condensation rotaries is typically around 40%. Silica gel–coated rotaries can achieve up to 60% humidity transfer efficiency, while zeolite-coated rotaries—thanks to the use of nanotechnology—can reach up to 80%.

technogen®

HEROS

Design & Structural Features

Air Mixing Prevention

There is a possibility of air mixing between fresh and exhaust air in rotary-type heat recovery systems. **HEROS** Modular Air Handling Units are equipped with sweeping cells to reduce air mixing. The sweeping cell changes the direction of the return air before it can mix with fresh air, redirecting it back to the return air path. This application keeps the surface of the rotary clean while reducing maintenance needs.

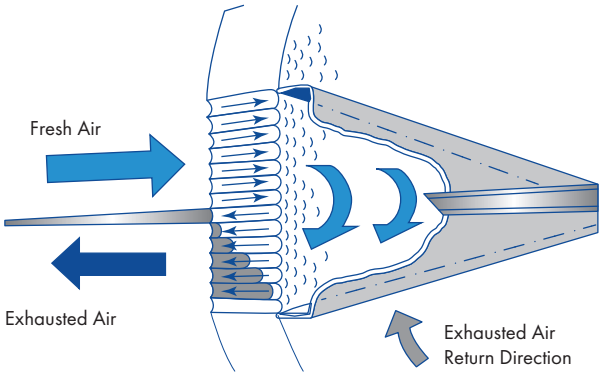

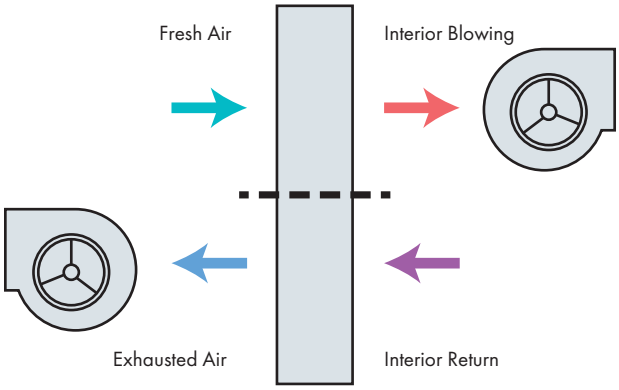

Pos. A

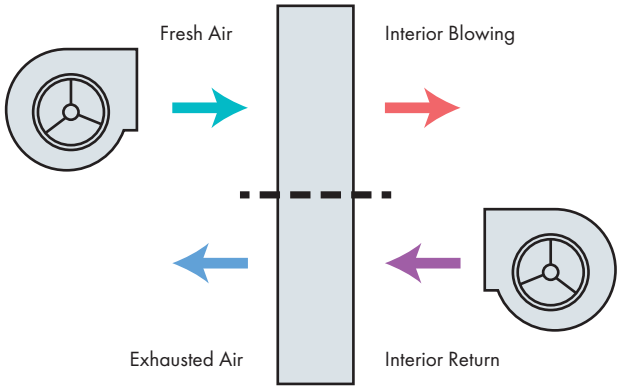

Pos. B

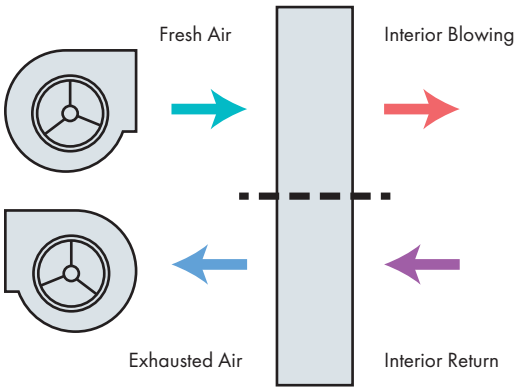

Pos. C

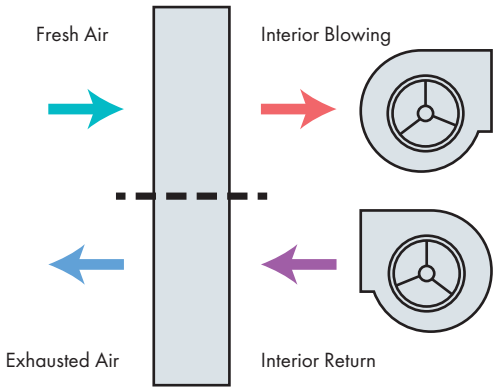

Pos. D

technogen®

HEROS

Dimensions

Model				Panel Thickness 50 mm		Bag Filter		Panel Filter	Heating Coil	Cooling Coil	DX Coil	Humidifier	Electrical Heater	Silencer	Plate Heat Recovery	Mixing Cell with Damper	Air Inlet-Outlet (Front/with damper)
				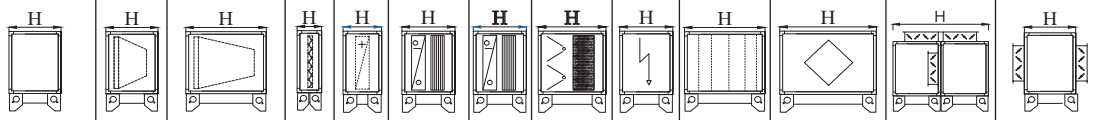													
				H	W	600	300	4	5	6	7	8	9	10	11	12	13
				mm													
HRS	4	X	4	912	712	865	559	253	406	559	559	712	559	865	1018	1171	559
HRS	4	X	6	912	1018	865	559	253	406	559	559	712	559	865	1018	1171	559
HRS	4	X	8	912	1324	865	559	253	406	559	559	712	559	865	1018	1171	559
HRS	6	X	6	1218	1018	865	559	253	406	559	559	712	559	865	1018	1171	559
HRS	6	X	8	1218	1324	865	559	253	406	559	559	712	559	865	1018	1171	559
HRS	6	X	10	1218	1630	865	559	253	406	559	559	712	559	865	1018	1171	559
HRS	6	X	12	1218	1936	865	559	253	406	559	559	712	559	865	1018	1171	559
HRS	8	X	8	1524	1324	865	559	253	406	559	712	712	559	865	1171	1171	559
HRS	8	X	10	1524	1630	865	559	253	406	559	712	712	559	865	1018	1171	559
HRS	8	X	12	1524	1936	865	559	253	406	559	712	712	559	865	1171	1171	559
HRS	8	X	16	1524	2548	865	559	253	406	559	712	712	559	865	1477	1171	559
HRS	10	X	10	1830	1630	865	559	253	406	559	712	712	559	865	1477	1630	712
HRS	10	X	12	1830	1936	865	559	253	406	559	712	712	559	865	1477	1324	712
HRS	10	X	14	1830	2242	865	559	253	406	559	712	712	559	865	1171	1324	712
HRS	10	X	16	1830	2548	865	559	253	406	559	712	712	559	865	1171	1324	712
HRS	10	X	18	1830	2854	865	559	253	406	559	712	712	559	865	1171	1324	712
HRS	10	X	20	1830	3160	865	559	253	406	559	712	712	559	865	1477	1630	712
HRS	12	X	12	2136	1936	865	559	253	406	559	712	712	559	865	1783	1936	1018
HRS	12	X	14	2136	2242	865	559	253	406	559	712	712	559	865	1477	1783	1018
HRS	12	X	16	2136	2548	865	559	253	406	559	712	712	559	865	1477	1630	1018
HRS	12	X	18	2136	2854	865	559	253	406	559	712	712	559	865	1477	1630	1018
HRS	12	X	20	2136	3160	865	559	253	406	559	712	712	559	865	1783	2242	1018
HRS	12	X	22	2136	3466	865	559	253	406	559	712	712	559	865	1783	1936	1018
HRS	12	X	24	2136	3772	865	559	253	406	559	712	712	559	865	1171	1936	1018
HRS	14	X	14	2442	2242	865	559	253	406	712	712	712	559	865	1783	2395	1171
HRS	14	X	16	2442	2548	865	559	253	406	712	712	712	559	865	1783	2395	1171
HRS	14	X	18	2442	2854	865	559	253	406	712	712	712	559	865	1783	2242	1018
HRS	14	X	20	2442	3160	865	559	253	406	712	712	712	559	865	1783	1936	1018
HRS	14	X	22	2442	3466	865	559	253	406	712	712	712	559	865	1783	1936	1018
HRS	14	X	24	2442	3772	865	559	253	406	712	712	712	559	865	1783	1936	1018
HRS	14	X	26	2442	4078	865	559	253	406	712	712	712	559	865	1783	1936	1018
HRS	14	X	28	2442	4384	865	559	253	406	712	712	712	559	865	1783	1936	1018
HRS	16	X	16	2748	2548	865	559	253	406	712	712	712	559	865	2548	2548	1324
HRS	16	X	18	2748	2854	865	559	253	406	712	712	712	559	865	1783	2395	1171
HRS	16	X	20	2748	3160	865	559	253	406	712	712	712	559	865	1477	2242	1018
HRS	16	X	22	2748	3466	865	559	253	406	712	712	712	559	865	1783	2242	1018
HRS	16	X	24	2748	3772	865	559	253	406	712	712	712	559	865	1783	1936	1018
HRS	16	X	26	2748	4078	865	559	253	406	712	712	712	559	865	1783	2242	1018
HRS	16	X	28	2748	4384	865	559	253	406	712	712	712	559	865	1783	2242	1018
HRS	16	X	30	2748	4690	865	559	253	406	712	712	712	559	865	1783	2242	1018
HRS	16	X	32	2748	4996	865	559	253	406	712	712	712	559	865	1783	2242	1018
HRS	18	X	18	3054	2854	865	559	253	406	712	712	712	559	865	4690	3619	1783
HRS	18	X	20	3054	3160	865	559	253	406	712	712	712	559	865	3160	3160	1630
HRS	18	X	22	3054	3466	865	559	253	406	712	712	712	559	865	3160	3007	1477
HRS	18	X	24	3054	3772	865	559	253	406	712	712	712	559	865	2548	2854	1324
HRS	18	X	26	3054	4078	865	559	253	406	712	712	712	559	865	2089	2548	1324
HRS	18	X	28	3054	4384	865	559	253	406	712	712	712	559	865	1783	2395	1171
HRS	18	X	30	3054	4690	865	559	253	406	712	712	712	559	865	2089	2395	1171
HRS	18	X	32	3054	4996	865	559	253	406	712	712	712	559	865	1783	2395	1171
HRS	18	X	34	3054	5302	865	559	253	406	712	712	712	559	865	1783	2395	1171
HRS	18	X	36	3054	5608	865	559	253	406	712	712	712	559	865	1783	2395	1171
HRS	20	X	20	3360	3160	865	559	253	406	712	712	712	559	865	4690	3772	1936
HRS	20	X	22	3360	3466	865	559	253	406	712	712	712	559	865	4690	3619	1783
HRS	20	X	24	3360	3772	865	559	253	406	712	712	712	559	865	4690	3160	1630
HRS	20	X	26	3360	4078	865	559	253	406	712	712	712	559	865	3160	3007	1477
HRS	20	X	28	3360	4384	865	559	253	406	712	712	712	559	865	3160	2854	1324
HRS	20	X	30	3360	4690	865	559	253	406	712	712	712	559	865	2548	2548	1324
HRS	20	X	32	3360	4996	865	559	253	406	712	712	712	559	865	2548	2548	1324

These datas are for quick selection: for different parameters, selection programme should be used.

HEROS

Quick Selection

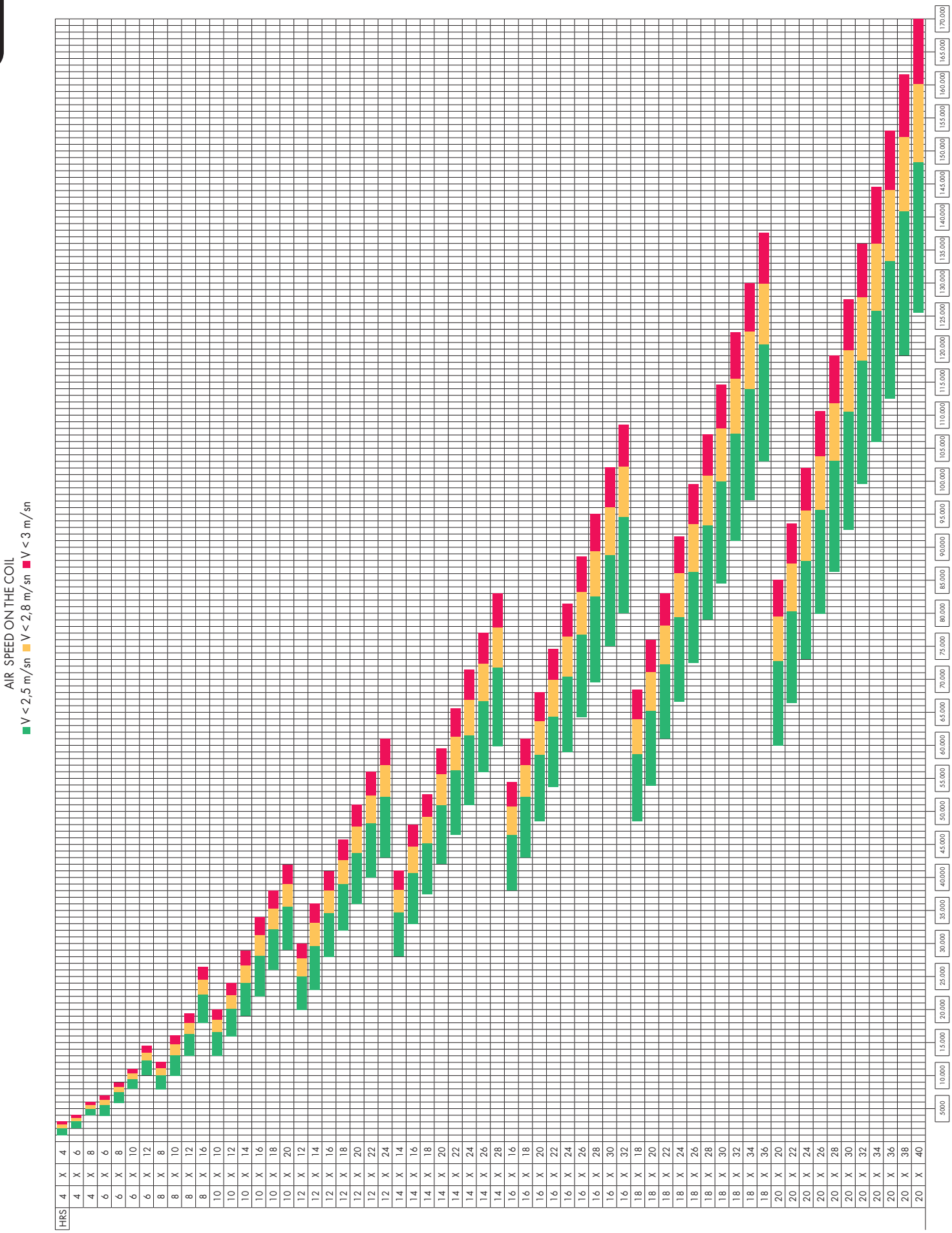

HEROS

Design & Structural Features

Control Systems (Automation)

HEROS Modular Air Handling Units, in accordance with the increasing demand for low energy consumption and integrated control systems in buildings, can be produced with built-in automation systems upon request.

The system consists of electrical panels and controllers for all the equipment used in the air handling unit. It controls the unit and provides safe and efficient operation throughout the unit's lifetime.

Air quality sensors, humidity sensors, pressure sensors, temperature sensors, frequency inverters for adjusting airflow, filter monitoring, and EC motor automation can all be included in the total automation system.

It allows the system to be controlled through a hand terminal, a building management system, or an internet connection.

Automation control panels are designed by our technical team in accordance with required parameters. Below controls can be maintained by choosing appropriate components;

- Constant air flow
- Constant duck pressure
- Ventilaton on Demand
- Variable Air Flow Control
- Electrical Heater Check
- Heating Capacity Check
- Cooling Capacity Check
- Heat Recovery Exchanger Check
- Freezing Check
- Fire alarm
- Checking of the Filters
- Recording and checking of the failures
- Weekly programing of the unit
- Control of the Damper

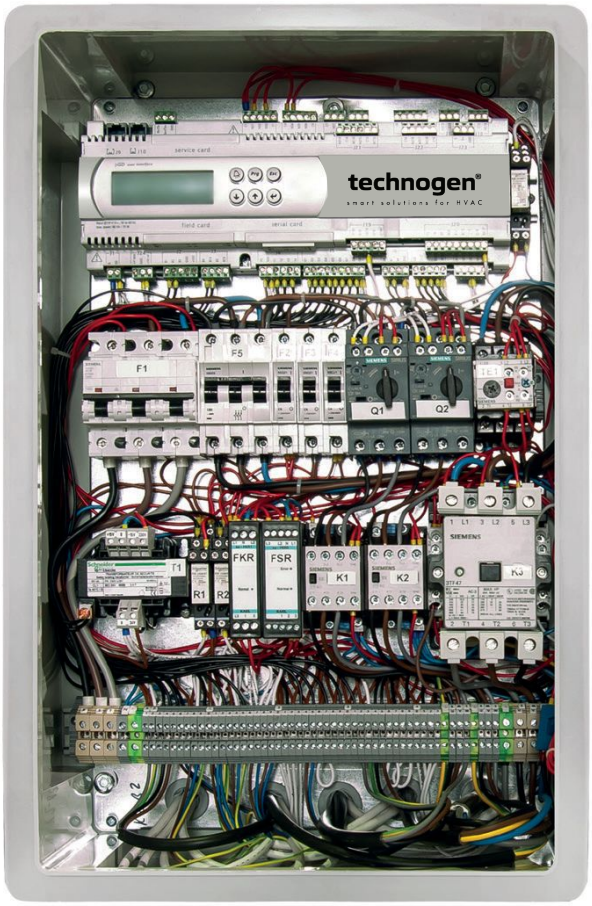

smart solutions for HVAC

Contact Us
info@technogen-hvac.com

Yazıbaşı Mah. 9224/1 Sokak No: 6
Torbalı, **İzmir, Turkey**

technogen®

smart solutions for HVAC