Tecology

Ecology Units

technogen®

Clean Air, Healthy Workplaces

technogen®

smart solutions for HVAC

Contents

Tecology

3 Overview

4 Technical Specifications

7 Dimensions

8 Automation

9 Electrical Scheme

technogen®

Tecology

Overview

Ecological Kitchen Filtration

Cooking, frying, and grilling in industrial kitchens generate grease particles, smoke, odors, and excess heat. These pollutants can negatively impact employee health, reduce workplace comfort, and harm the environment if left unfiltered.

Tecology Units provide an efficient, eco-friendly solution by filtering contaminated air before releasing it into the atmosphere. Designed for durability and ease of maintenance, **Tecology** ensures cleaner kitchens, healthier staff, and a reduced environmental footprint.

Advantages of Tecology Units

- Discharge of clean, filtered, and harmless air into the atmosphere
- Compact design with easy installation for industrial kitchen applications
- High-efficiency filtration of grease particles
- Washable electrostatic precipitators for simplified maintenance
- Removable activated carbon filters for odor control
- Diffuser section for optimal grease particle precipitation
- Flexible design with single or double ESP options, depending on food preparation methods (grilling, frying, etc.)

technogen®

Tecology

Technical Specifications

Specifications

Tecology Units are composed of four main sections: Diffuser Section, ESP Section, Activated Carbon Filter Section, and Fan/Motor Section.

1. Diffuser Section

- Reduces airflow speed to below 3 m/s for maximum ESP efficiency
- Ensures smooth, linear airflow across the ESP
- Prevents performance loss due to excessive airspeed

2. ESP Section

- Houses the electrostatic precipitator (ESP)
- ESP mounted on slides for easy removal and cleaning
- Stainless steel drain pans with sliding frame for maintenance
- Service door for safe, quick access

Available ESP Capacities:

- 3,500 m^3/h
- 5,000 m^3/h
- 7,000 m^3/h

Configurable Range:

- From 3,500 m^3/h up to 22,500 m^3/h using combined ESP modules

Technical Specifications	Tecology 3500	Tecology 5000	Tecology 7500	Tecology 10000	Tecology 15000	Tecology 20000	Tecology 22500
Air Flow (m^3/h)	3500	5000	7500	10000	15000	20000	22500
Number of Precipitators	1x3500	1x5000	1x7500	2x5000	2x7500	4x5000	3x7500
Precipitator Surface(m^2)	20.7	27.6	41.4	55.2	82.8	110.4	124.2
Number of Precipitator Plates	65	98	129	130	196	392	387
Efficiency (%)	95<	95<	95<	95<	95<	95<	95<

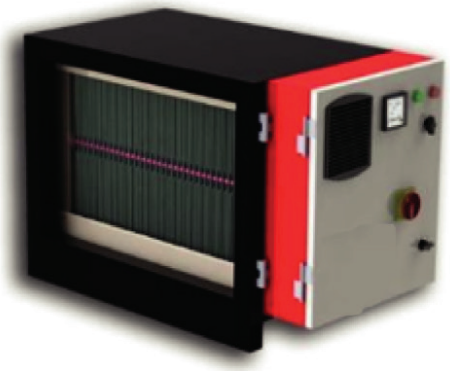

technogen®

Tecology

Technical Specifications

ESP Filtration Process

The Electrostatic Precipitator (ESP) in **Tecology Units** operates through four main stages to ensure maximum removal of grease, smoke, and fine particles:

1. Pre-Filtering

- A washable metal filter is used to capture larger grease particles at the initial stage.
- This step reduces particle load before entering the ionization stage, improving system efficiency.

2. Ionization

- Fine particles as small as 0.3 microns (1 micron = 1/1000 mm) are positively charged in this stage.
- The ionization process uses high electrical power to prepare particles for collection.
- After ionization, the contaminated air is positively charged and ready for efficient particle capture.

3. Collector Stage

- The collector consists of alternating plates, one side positively charged and the other negatively charged.
- As air passes through, positively charged particles are repelled by the positive plates and attracted to the negative plates.
- These particles are then captured on the negative plates, completing the precipitation process.

4. Post Metal Filter

- Similar in design to the pre-filter, the post metal filter prevents any residual particles that may detach from the ionizer or collector from passing into the fan section.
- This ensures maximum protection and consistent air purity.

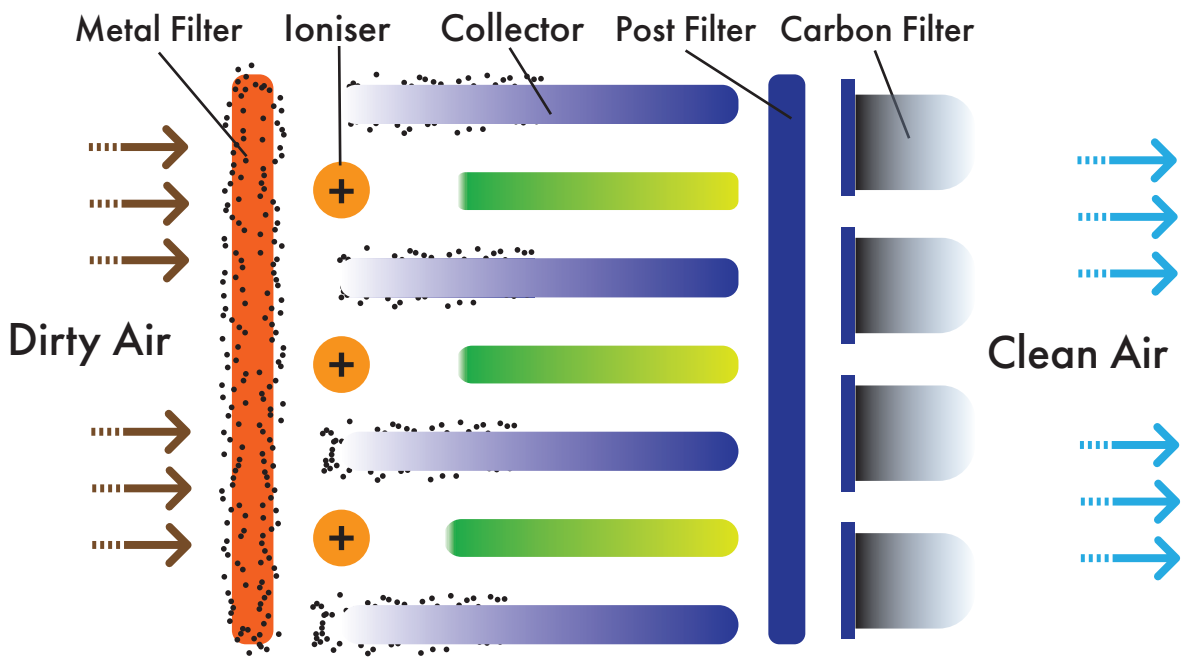

technogen®

Tecology

Technical Specifications

Active Carbon Filter

- Designed for effective odor filtration in industrial kitchen exhaust systems.
- Utilizes cylindrical cartridges with a mesh structure, filled with **3–4 mm activated carbon granules.**
- Cartridge length: **40 cm.**
- Cartridges are mounted on a plate with an **easy-locking system** for quick installation and removal.
- Periodic replacement is required, based on inspection of the activated carbon media, to ensure consistent odor removal performance.

Filter Body	1mm Electrostatic Painted Galvanised
Dimensions	Ø 140 x 400 mm
Quality of Carbon	3KG
Maintenance	Rechargable

Plug Fan Filter

The unit has plug fans with frequency drivers . Using of plug fans will decrease energy consumption of the

technogen®

Tecology

Technical Specifications & Dimensions

Technical Specifications	Tecology 3500	Tecology 5000	Tecology 7500	Tecology 10000	Tecology 15000	Tecology 20000	Tecology 22500
Air Flow (m³/h)	3500	5000	7500	10000	15000	20000	22500
External Static Pressure (Pa)	500	500	500	500	500	500	500
Motor Round (rpm)	3000	3000	3000	3000	1500	1500	1500
Motor Power (kW)	1.5	2.2	4	5.5	7.5	11	15
Collector Surface (V/F/Hz)	380/3/50	380/3/50	380/3/50	380/3/50	380/3/50	380/3/50	380/3/50
Number of Collector Plates (Each)	1 x 3500	1 x 5000	1 x 7500	2 x 5000	2 x 7500	4 x 5000	3 x 7500
Efficiency (m²)	20.7	57.6	41.4	55.2	82.8	110.4	124.2
Diffuser Length (Each)	65	98	129	130	196	392	387
Efficiency (%)	95<	95<	95<	95<	95<	95<	95<
Active Carbon Filter (Each)	16	24	36	48	72	96	108
Air Diffuser Cell Length (mm)	1000	1000	1000	1000	1000	1000	1000
Air Diffuser (Piece)	1	1	1	1	1	1	1
Frequency Inverter (Piece)	1.5	2.2kW	4kW	5.5kW	7.5kW	11kW	15kW

Dimensions	Tecology 3500	Tecology 5000	Tecology 7500	Tecology 10000	Tecology 15000	Tecology 20000	Tecology 22500
Height (mm)	872	872	872	1484	1484	1484	2096
Width (mm)	712	1018	1477	1018	1477	1936	1477
Length (mm)	4025	4025	4025	4178	4178	4484	4484
Outlet Diameter (mm)	300x652	300x958	300x1417	600x958	600x1417	600x1876	900x1417
Inlet Diameter (mm)	300x652	300x958	300x1417	600x958	600x1417	600x1876	900x1417
Weight (kg)	750	865	1035	1180	1415	1860	1815
Maintenance Side (Piece)	1	1	1	1	1	2 (right-left)	1

Automation System

Tecology units are equipped with a dedicated control and automation system. The main control board is supplied separately and can be installed in locations such as the kitchen. By default, the panel is IP55-rated, with an IP65-rated option available upon request.

Fan Control

The system utilizes frequency drivers that are harmonic- and EMC-filtered, and fully compatible with ModBus RS485 communication. The fan can be operated at three adjustable speed levels: low, medium, and high. The frequency values for each step can be configured as required.

Protection Features

- The ESP system remains off when the fan is not running.
- The fan automatically stops if the fan door is opened.
- Emergency start/stop button is included.
- Electrical board is protected by fuses.
- A canopy-type roof is available for outdoor installations.

ESP Control

- A four-stage switch is used to manage the ESP unit:
- Stage 1: Activates both the ESP and the fan.
- Stages 2 and 3: Increase air volume.
- The system ensures that the ESP does not operate if the fan is inactive.

Control Module

- The control module consists of two sections: ESP control and unit control.
- The ESP control panel is pre-installed on the unit.
- The unit control panel is provided separately and can be mounted in a convenient location (e.g., the kitchen). It connects to the unit via cabling.

Status Indicators:

- Fan operating
- Fan not operating
- ESP operating
- ESP not operating

technogen®

Tecology

Electrical Scheme

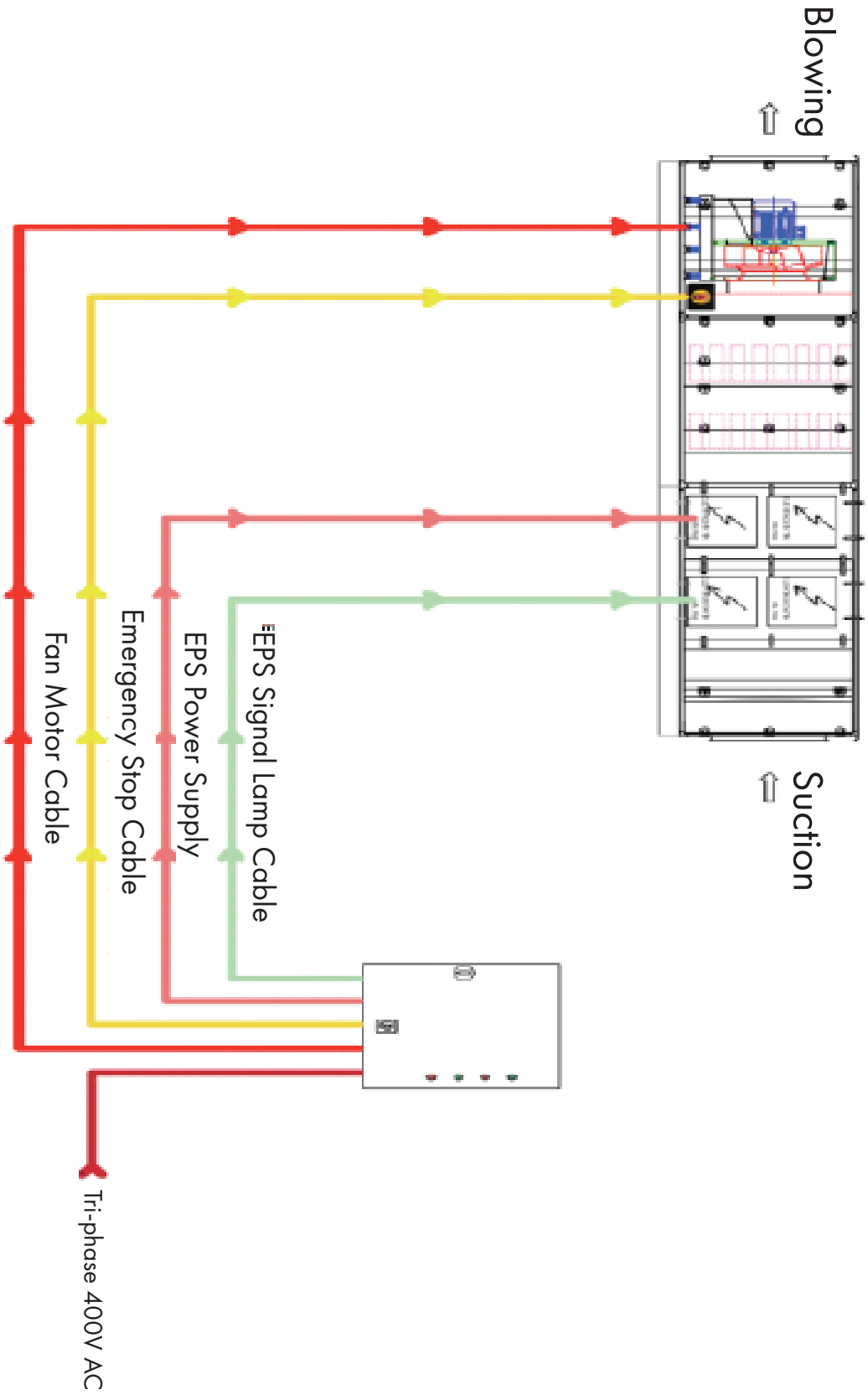

smart solutions for HVAC

Contact Us
info@technogen-hvac.com

Yazıbaşı Mah. 9224/1 Sokak No: 6
Torbalı, İzmir, Turkey

technogen®